ELEVATOR TECHNOLOGY

Kübler

- Incremental Encoders
- Absolute Encoders
- Bearingless Encoders
- Functional Safety
- Services

pulses for automation

Solutions for elevator technology

Flexible
Innovative
Adding value
Partnership-based

The Kübler Group belongs today to the leading specialists worldwide in the fields of position and motion sensors, functional safety, counting and process technology as well as transmission technology.

The elevator technology is one of our most important core activities offering products, solutions and services that inspire our customers.

We rely on close and personal co-operation to produce solutions with high customer benefit.

Contents

Added value for our customers 4

Encoders for elevator technology

- Encoders for geared motors 6
- Encoders for gearless drives 8
- Sendix 5873 Motor-Line encoders 10
- Bearingless encoders for direct drives 12
- Functional Safety (FS) 14

Electrical interfaces

- Electrical interfaces for encoders 16

Kübler Services

- Tailor-made solutions – Kübler Design System 20
- Kübler Service for planning dependability 21

Flexibility and quality

A wide product range characterized by high quality standards allows us to meet a variety of very different customer requirements. In addition, our constant goal is to reduce system costs and to create added value thanks to innovations.

Innovation and partnership

For us, innovation comes from creativity that allows us thinking out of the box. We develop, jointly with our customers, novel products, solutions and services. Thanks to the close proximity to our customers, we make sure that our innovations meet all their requirements.

Headquarters in Villingen-Schwenningen

Functional Safety

Safety is – not least because of the UE Machinery Directive 2006/42/EC – an integral part of plants manufacturing. The selection of the right encoder for Functional Safety must be governed by the principle that safety will be achieved by an intelligent interaction between the encoder and the controller.
Moreover, certified Kübler products allow faster certification of the whole system (motor controller) than standard products.

Customer-specific development

Standardizing and modularization are of essential importance in the elevator technology. Nevertheless, special solutions are still an important element in many companies to allow them realizing customer-specific applications. Kübler has been proving for many years its ability to respond flexibly to special solutions, especially in the elevator technology, which requires optimal encoder motor connection.
In short: we want to supply the ideal sensor for your drive.

Kübler Group – 55 years of innovation

Founded in the year 1960 by Fritz Kübler, the family business is now led by the next generation of the family, his sons Gebhard and Lothar Kübler. Ten international group members and distributors in more than 50 countries offer local product know-how, service and advice throughout the world. Innovative product and sector solutions, as well as solutions for functional safety and a high level of service, are the reasons behind our global success. The strict focus on quality ensures the highest levels of reliability and a long service life for our products in the field. Over 480 dedicated people worldwide make this success possible and ensure that customers can continue to place their trust in our company.

Encoders for geared motors

Geared motors are used for the new construction, but mainly for the modernization of elevator systems. Their main features are the reduction gear and a handwheel at the end of the motor shaft. On these drives, an incremental encoder mounted between the motor and the handwheel measures the rotary speed for speed control and transmits it to the CDM – Complete Drive Module.

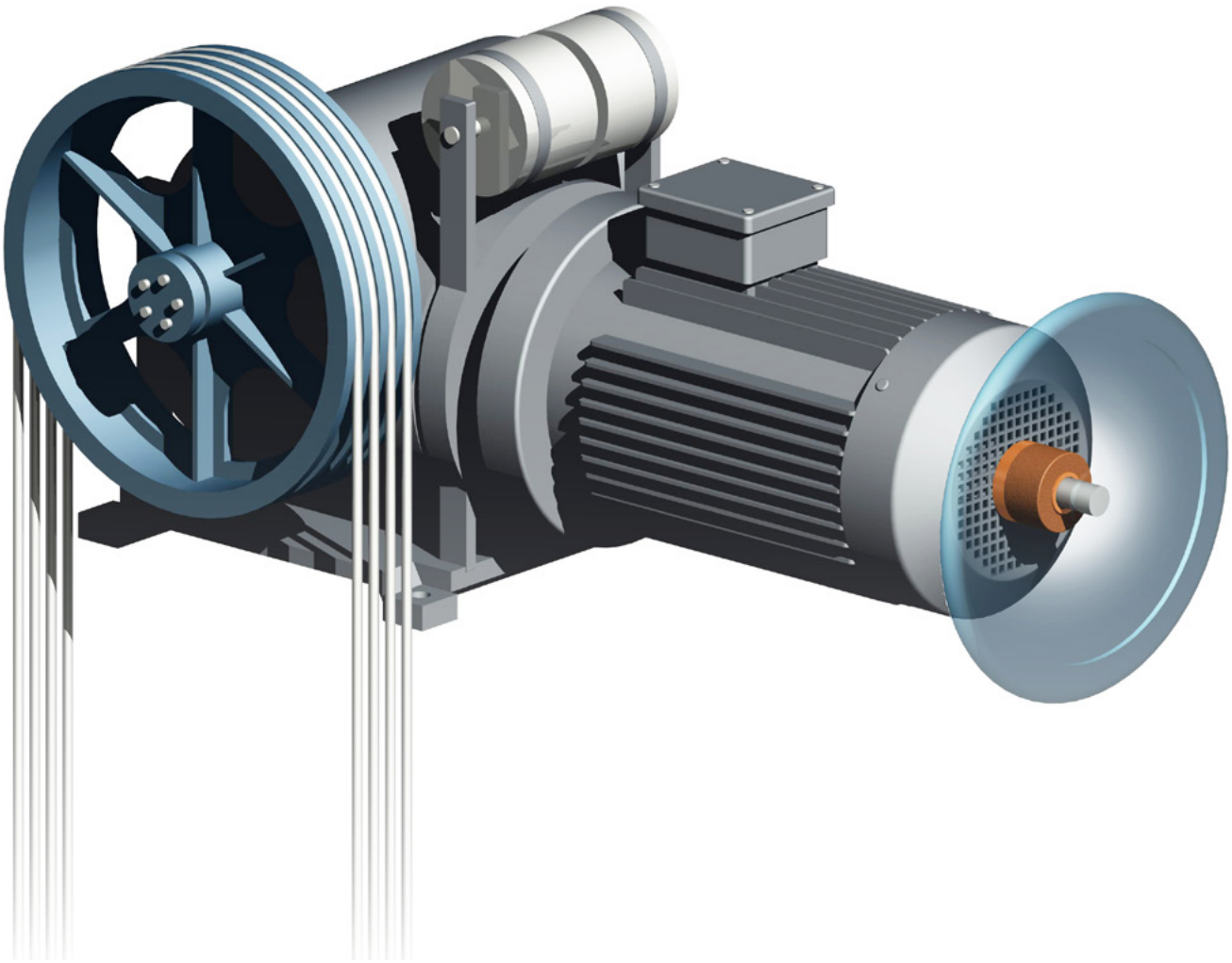

Encoders for geared motors

The encoders for geared motors are characterized in particular by their large hollow shaft and their compact size intended for tight mounting spaces. In addition, high encoder resolution is necessary in order to ensure optimum speed regulation.

	5821	A020 / A02H
General information	Compact encoder for large smoothly-operating drives and tight mounting space	Tight mounting conditions and applications with high bearing forces
Mechanical interface	Hollow shaft max. 28 mm	Hollow shaft max. 42 mm
Electrical interface	Push-pull, RS422	Push-pull, RS422, SinCos
Size	ø 58 mm	ø 100 mm
Resolution max.	5000 ppr	5000 ppr
Speed max.	2500 min^{-1}	6000 min^{-1}
Temperature range	-20 ... +70°C	-40 ... +80°C
Power supply	5 V DC 8 ... 30 V DC	5 V DC 5 ... 30 V DC 10 ... 30 V DC

Encoders for gearless drives

Direct drives (gearless drives) are the consistent further development of geared motors. Their advantages are primarily a high torque even at small rotary frequencies, as well as uniform and silent operating properties.
Direct drives are therefore perfectly suited for use in the elevator technology.

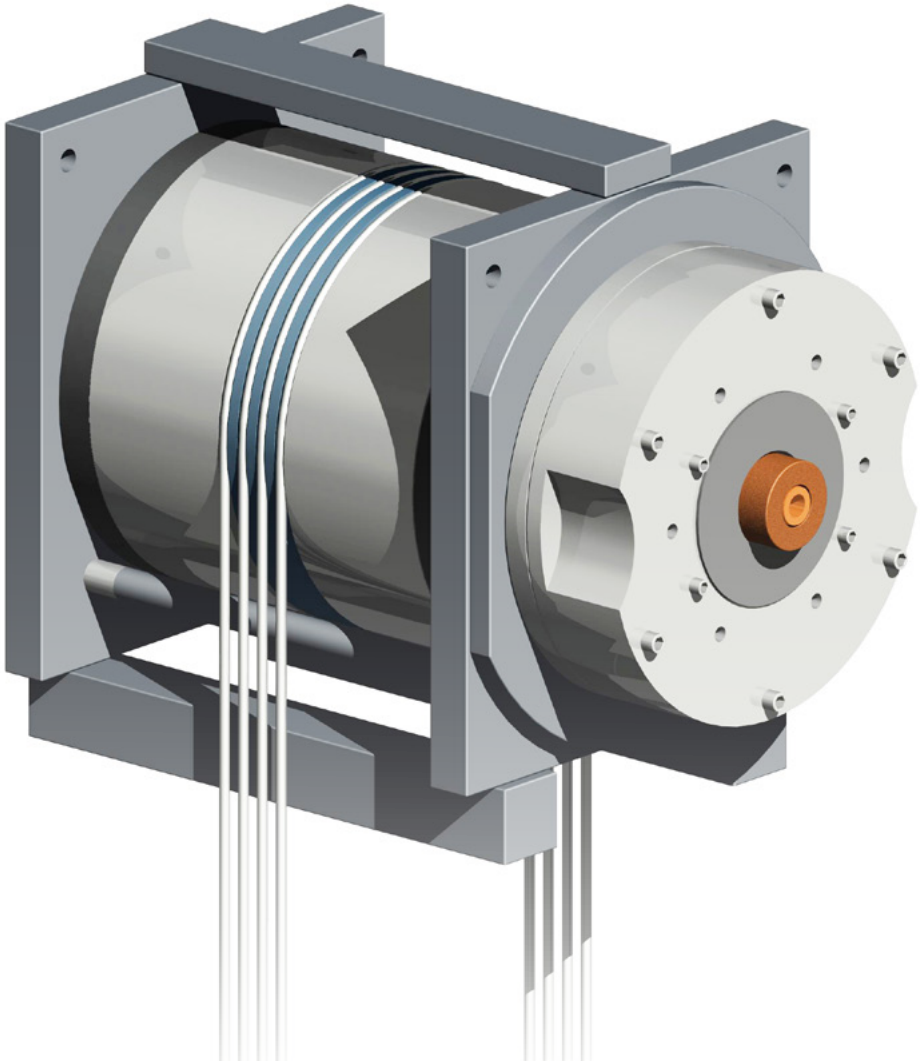

Encoders for gearless drives

Flexibility is the main characteristic of the encoders for gearless drives. They provide the suitable encoder technology, the optimal mechanical mounting, but also the electrical interface.
The drive and/or the system determine the choice of the suitable encoder.

	Sendix 5873.GK	**Sendix 5873.HK**
General information	Absolute encoder with tapered shaft and robust bearing structure in Safety-Lock™ design	Absolute encoder with tapered shaft and robust bearing structure in Safety-Lock™ design
Mechanical interface	Tapered shaft 10 mm with stator coupling, ø 72 mm (further mechanical interfaces on request)	Tapered shaft 10 mm with expanding coupling, ø 65 mm (further mechanical interfaces on request)
Electrical interface	Absolute SSI / BiSS Incremental SinCos	Absolute SSI / BiSS Incremental SinCos
Size	ø 58 mm	ø 58 mm
Resolution max.	13 bit or 17 bit + 2048 ppr SinCos optional: 21 bit, fully-digital	13 bit or 17 bit + 2048 ppr SinCos optional: 21 bit, fully-digital
Speed max.	9000 min^{-1}	9000 min^{-1}
Temperature range	-40 ... +105°C	-40 ... +105°C
Power supply	5 V DC 10 ... 30 V DC	5 V DC 10 ... 30 V DC

Sendix 5873 Motor-Line encoders

The Sendix 5873 singleturn encoders with SSI or BiSS interface and optional 2048 ppr SinCos signals are predestined for the elevator technology. Furthermore, the Sendix 5873 in Motor-Line version convince with their plug-and-play commissioning including an electronic data sheet and the possibility of setting the absolute measuring system to a predefined position (electronic zeroing).

SSI BiSS INTERFACE SinCos RS422 TTL

Your advantages at a glance

- High-resolution singleturn encoder for optimal travel comfort
- Predestined for the elevator technology thanks to its design optimized for gearless drives
- Cost-efficient thanks to simple plug-and-play commissioning
- Reduction of life cycle costs due to the optimization of drive efficiency thanks to the high-resolution absolute and analog encoder signals
- Reduction of the energy costs thanks to the electronic switching based on the high-resolution absolute position information of the measuring system

Characteristics

Resolution
- SSI or BiSS interface with 13 or 17 bit singleturn resolution and additional 2048 SinCos signals
- Optional: fully-digital BiSS interface with 21 bit resolution

Electrical interface
- BiSS or SSI interface with additional SinCos signals
- Electronic data sheet
- Possibility of setting the measuring system to a predefined position value (electronic zeroing)
- Optional SET key – to zero the Sendix 5873 Motor-Line at any desired position

Mechanical interface
- Tapered shaft with stator coupling, ø 72 mm or tapered shaft with expanding coupling, ø 65 mm
- Tangential cable outlet
- Robust bearing structure in Safety-Lock™ Design

Order code Tapered shaft

8.5873	.	X	K	X	X	.	X	X	2	X
Type		a	b	c	d		e	f	g	h

Extract from the data sheet - you will find further information under www.kuebler.com/motor-line_en

a *Flange*
G = with stator coupling, IP65, ø 72 mm [2.83“]
H = with expanding coupling, IP65, ø 65 mm [2.56“]

b *Tapered shaft*
K = ø 10 mm [0.39“]

c *Interface / power supply*
1 = SSI, BiSS / 5 V DC
2 = SSI, BiSS / 10 ... 30 V DC
3 = SSI, BiSS + 2048 ppr. SinCos / 5 V DC
4 = SSI, BiSS + 2048 ppr. SinCos / 10 ... 30 V DC
5 = SSI, BiSS / 5 V DC, with sensor output
6 = SSI, BiSS + 2048 ppr. SinCos / 5 V DC, with sensor output
9 = SSI, BiSS + 2048 ppr. RS422 (TTL-comp.) / 5 V DC, with sensor output
E = SSI, BiSS + 2048 ppr. SinCos / 4.5 ... 5.5 V DC, with sensor output [1]

d *Type of connection*
E = tangential cable, 1 m PVC
F = tangential cable, length PVC see below *)
G = tangential cable, with Sub-D connector (male contact, 15-pin, double-row), length PVC s. below *) [2]

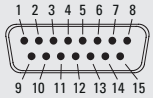

H = tangential cable, with Phoenix Contact connector (MC1.5/16-STF-3.81), length PVC s. below *) [2]

*) Available lengths (connection types F, G, H): 2, 3, 5, 8, 10, 15 m [5.56, 9.84, 16.40, 26.25, 32.80, 49.21‘]
order code expansion .XXXX = length in dm
ex.: 8.5873.GK2E.G323.0030 (for cable length 3 m)

e *Code*
B = SSI, binary
C = BiSS, binary
G = SSI, gray

f *Resolution* [3]
A = 10 bit
1 = 11 bit
2 = 12 bit
3 = 13 bit
4 = 14 bit
7 = 17 bit
C = 21 bit [4]

g *Inputs / outputs* [3]
2 = SET, DIR input additional status output

h *Options (service)*
1 = no option
2 = status LED
3 = SET button and status LED

1) Without reverse polarity protection.
2) Can be combined as a standard only with interface E (other variants on request).
3) Resolution, preset value and counting direction factory-programmable.
4) Only in conjunction with interface 1 or 2 and code C.

Solutions for the ideal connection of motor, encoder and CDM – Complete Drive Module

The Sendix 5873 singleturn encoders in Motor-Line version provide above all high flexibility. This means that focus is set on the solution itself in order to achieve an ideal connection between the motor, the encoder and the CDM – Complete Drive Module. This ensures maximum customer benefit and highest flexibility.

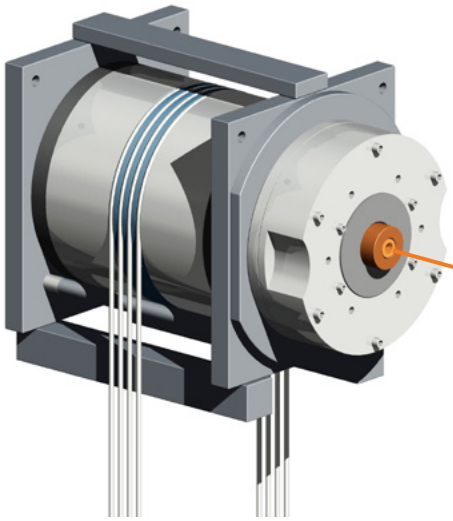

Mechanical connection
Wide range of installation solutions, ensuring the optimal encoder for every application

Electrical connection
Various cable lengths and versions available, with various connectors for almost all common CDM – Complete Drive Modules

Bearingless encoders for direct drives

Direct drives designed as external rotor motors are available in various versions which are characterized by a compact and particularly flat construction.
Generally, these drives do not require an additional machinery room and are installed directly in the elevator shaft.

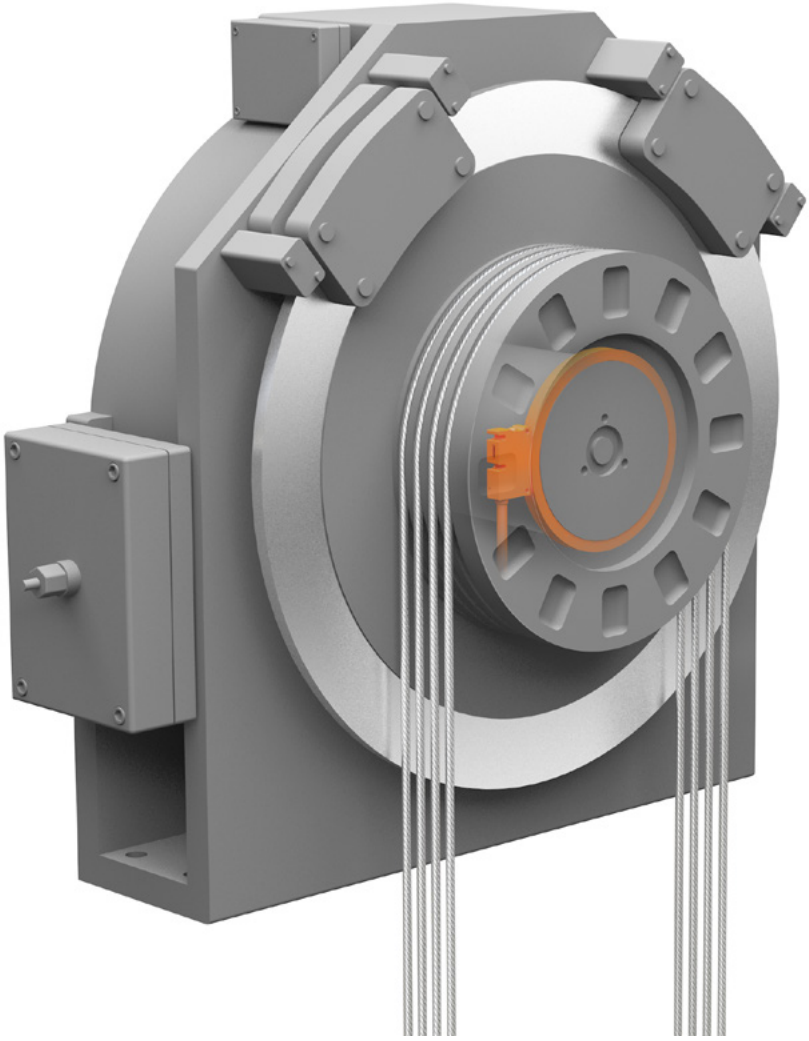

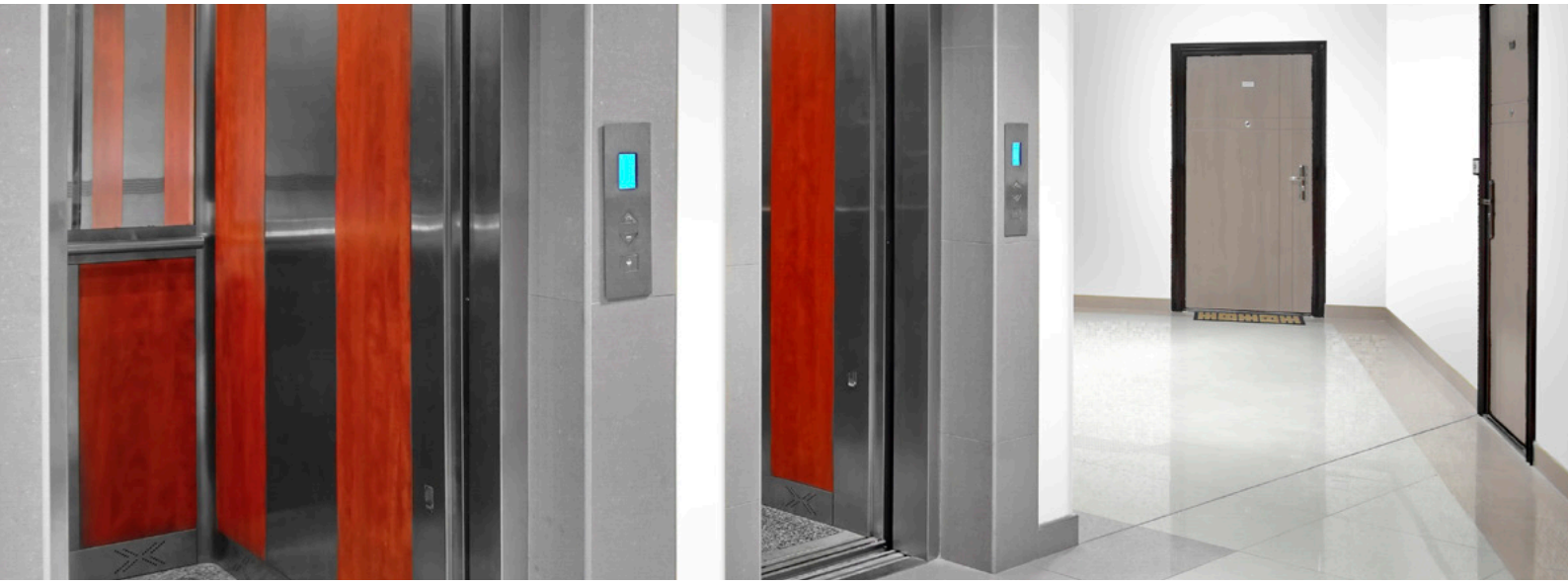

Bearingless encoders for direct drives

The bearingless encoders are made of a magnetic ring and a sensor head. They are ideal for compact and flat external rotor motors. The non-contact measuring principle, with its reduced mounting depth and various magnetic ring diameters, is perfectly suited for tight installation possibilities. Individual adaptation of the measuring system to the dimensions of the drive are here one of the most important prerequisites.

	RI50 / Limes LI50
General information	Bearingless encoder for tightest mounting situations (only 10 mm deep)
Ring diameter	On request (customer-specific)
Electrical interface	Push-pull, RS422
Size	LI50: 40 x 25 mm
Resolution max.	On request (customer-specific)
Speed max.	12000 min^{-1}
Temperature range	-20 ... +80°C
Power supply	4.8 ... 26 V DC (RS422) 4.8 ... 30 V DC (Push-Pull)

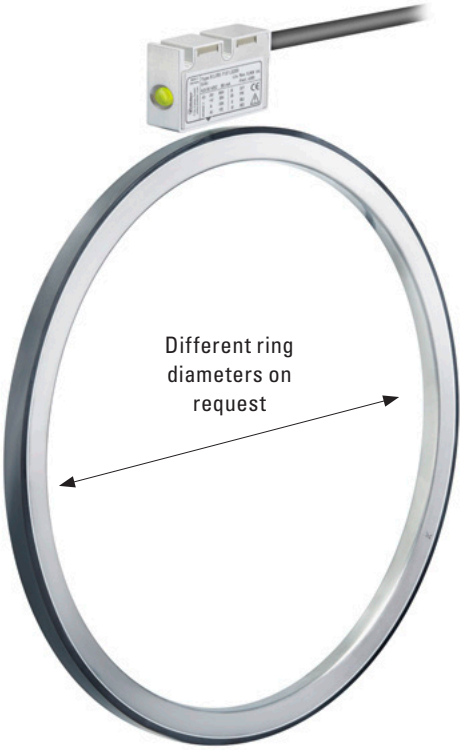

Functional Safety (FS)

Safety is – not least since the EU Machinery Directive 2006/42/EC – an “integral part of the construction of drives”.
When choosing the right encoder for functional safety the principle applies that safety is achieved through the intelligent combination of encoder, controller and actuator.
But safety goes further than this: safe components are characterized by a robust reliable interface and by the ability to cope with high mechanical and electronic loads. Both Sendix SIL encoders with SSI absolute and additional SinCos interface and also the SinCos version of the incremental encoders have been certified up to SIL3 by the German Institute for Occupational Safety (IFA).

Encoder family for Functional Safety

In order to achieve safe incremental information with the encoder, the controller must monitor the validity of the analog, 90° phase-shifted sine/cosine signals with the help of the function: $\sin^2 + \cos^2 = 1$.
In order to obtain safe information with the encoder regarding the absolute position, the controller counts the incremental pulses and compares the result with the absolute position also provided by the encoder. A 100% reliable mechanical connection is required for a safe function in the applications. Suitably sturdy fixing elements can help eliminate the risk of faults.

Incremental SinCos encoders	Sendix SIL 5814FS2 / FS3 (shaft) Sendix SIL 5834FS2 / FS3 (hollow shaft)
Absolute singleturn SSI / SinCos encoders	Sendix SIL 5853FS2 / FS3 (shaft) Sendix SIL 5873FS2 / FS3 (hollow shaft)
Absolute multiturn SSI / SinCos encoders	Sendix SIL 5863FS2 / FS3 (shaft) Sendix SIL 5883FS2 / FS3 (hollow shaft)

www.kuebler.com/safety

Electrical interfaces for encoders

Encoders have various tasks to fulfil in elevator engineering.
One of the most frequent tasks is to supply information concerning speed, for better control of the motor using a CDM – Complete Drive Module. For this type of speed control motor feedback is necessary, which is suitable for improving the speed quality and the control response. As a rule a SinCos or TTL / HTL signal is used for this purpose.
Synchronous motors typically use absolute encoders with BiSS or SSI interface.

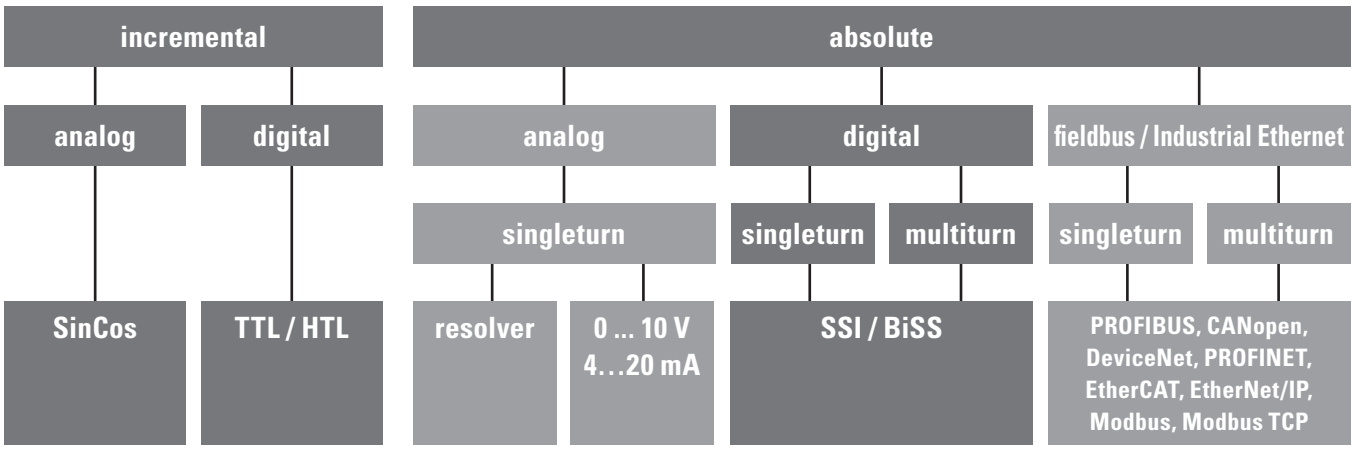

Besides the standard encoders, there are also combined encoders that have both an incremental and an absolute interface. They therefore can provide independent data for various control circuits (rotary speed and position controllers).
Many of these interfaces are also available in variants that can be used for Functional Safety.

Incremental interface (SinCos, TTL / HTL)

The SinCos interface provides a sine wave-shaped voltage signal. High-quality encoders allow very high interpolation of this signal, which benefits the speed control. This means that the SinCos signals can be processed in many various ways in the subsequent electronics. The steady signal evolution makes sure that signal information is available at any time. This is an advantage in drives for speed control, even for very slow motions.
The cosine precedes the sine by 90° so that one of the signals emits a valid value also when passing the zero point. This is also the great difference with digital incremental signals such as HTL or TTL. These have signal states in which both channels A and B can have simultaneously the value zero or one, which does not allow detecting errors.

By contrast, even though the encoders with incremental interface (TTL / HTL) also generate a sine wave shaped scanning signal, this signal is then digitized in the encoder and provided to the subsequent electronics as a rectangular pulse.
Various output types are available for transmission.

SSI interface

The synchronous serial interface (SSI) is a digital interface for absolute motion and angle measuring systems. This means that the SSI interface allows digital and absolute transmission of motion or angular information. It is therefore particularly well suited for applications requiring reliability and signal robustness in industrial environments. Another advantage is the fact that transmission requires significantly less lines than parallel interfaces. It also allows much longer cable lengths.

At rest, the clock and data lines are at a high level. With the first falling clock-pulse edge, the current encoder data are stored in the buffer ready to be sent. With the next rising clock-pulse edge, the data are transmitted bit by bit, starting with the MSB.
The transfer of a complete data word requires n+1 rising clockpulse edges (n=resolution in bit), e.g. 14 clock signals for a complete readout of a 13 bit encoder.
After the last positive going clock-pulse edge the data line will remain for the duration of the monoflop time t3 at a low level, until the encoder is ready for a new data word. The clock line must stay high for at least as long, and then can begin a new readout sequence again with the next falling edge.

www.kuebler.com/ssi-interface

BiSS interface

The BiSS interface is a fully-digital bidirectional connection for absolute measuring systems. Therefore, BiSS is perfectly suited for dynamic axes with very high accelerations, constant speed control and best positioning accuracy possible.

Advantages

The great advantage of the BiSS interface is its open source protocol for sensors, inverters and drives, offering e.g. high speeds (data rate up to 10 MHz) and a delay compensation for the optimal operation of the drive system. The selection of the components is not imposed by a licensed interface, but only by the requirements of the application, which results in more flexibility and higher cost-efficiency.

- BiSS is fully-digital and bidirectional and is perfectly suited as a motor feedback system for both linear and rotary axes.
- As the BiSS interface is not proprietary, it is cost-efficient and flexible. This ensures a much wider choice of available products.
- The inverters equipped with an RS422 and RS485 interface can mostly be used for BiSS thanks to an extension with a firmware update for BiSS, thus opening the possibility of using an open source interface.
- There is nevertheless also the possibility of a quick and simple BiSS Master implementation with free BiSS IPs on processors and FPGAs.
- Advantages for the commissioning of motor and inverter thanks to plug-and-play using the motor data and maintenance information that can be stored in and retrieved from the encoder and to the possibility to set the absolute measuring system to a predefined position value.
- Information and evaluation of the complete system during operation thanks to Condition Monitoring and to the delay compensation for accelerated communication, e.g. to minimize drift effects due to temperature.

Contact persons for advice and support for the implementation of BiSS

Stefan Schubert
Team leader Service & Application
Phone: +49 7720 3903-35
E-Mail: stefan.schubert@kuebler.com

Rainer Grüninger
Service & Application
Phone: +49 7720 3903-764
E-Mail: rainer.grueninger@kuebler.com

BiSS Support Tool

The BiSS support tool helps implementing a BiSS interface. The following components are available in a set for this purpose:

- Sendix 5873 Motor-Line (8.5873.HK3E.C323)
- BiSS-to-PC Adapter (USB)
- GUI Software for Windows PC
- Analysis board
- Adapter cables for connecting the components

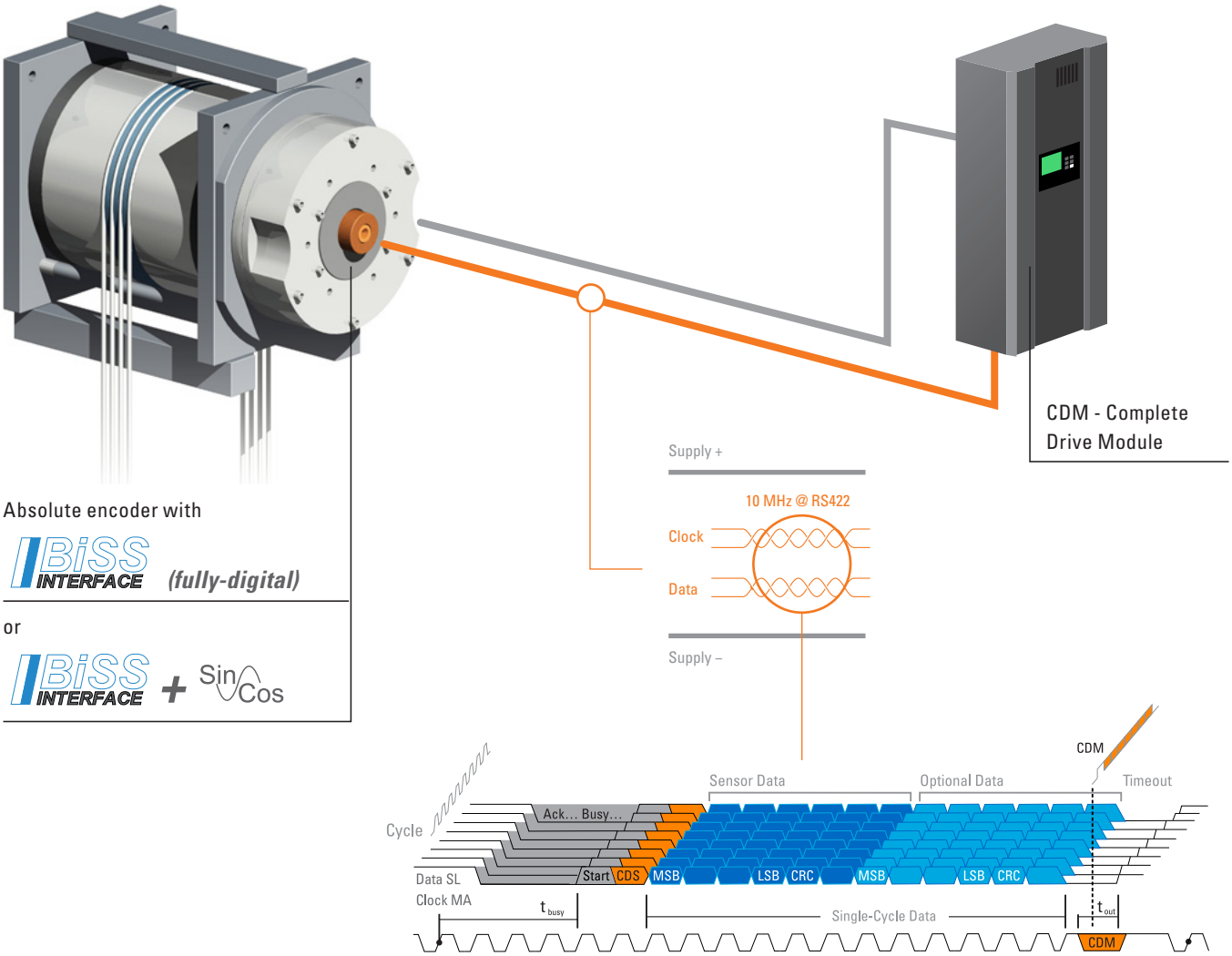

www.kuebler.com/biss_en

Tailor-made solutions – Kübler Design System

With the KDS method our customers receive a lasting solution to lowering costs, reducing the number of models available or eliminating quality deficiencies. With KDS we develop product and engineering solutions together. The method stands out because of its structured process; this delivers innovation through experience and cooperation with the customer.

Gebhard and Lothar Kübler, Managing Directors Fritz Kübler GmbH

The Kübler Design System – satisfying customer demands

Customer demands

- Long service life
- High-performance product
- Simple installation and maintenance
- System and process quality
- Optimized investment costs

fulfilled via

Technology

- Optimal sensor technology
- Optimal product adaptation
- Optimal integrat

Methodology and experience

- Kübler competency in methodology and project management
- Reduction in customer R&D costs
- Combination of customer and Kübler expertise
- Speeding up of the development process

Service

- Complete systems
- Engineering service
- Logistics

The 4 phases of the Kübler Design System

Analysis, Demands

- Definition of the requirements
- Product requirements
- Timetable
- Target costs

Design

- Technology
- Functions
- Performance characteristics

Prototype, Test

- Quickly realized prototype and/or specific customer drawing
- Testing of the prototype in the application
- Support by Kübler application team during test phase
- Customer approval

Industrialization, Production

- Implementation of production and quality processes
- Logistics/ packaging
- Ongoing quality controls
- Continuous improvement (Kaizen)

PRESALES

- Selection tool
- Kübler website: Product Finder

Kübler industry specialists for applications and complete integration solutions – on site worldwide.

- Delivery Service 10 by 10
- 48 h Express and Repair Service

Sample Service – Fast delivery of customized versions

Kübler Service for Planning Dependability

Fast, reliable service and professional advice have top priority at Kübler. We are globally on your doorstep in 8 service and application centres and offer our customers planning dependability. Our processes and services are certified and are constantly being improved.

24one delivery promise

Manufacturing in 24 hours. For orders placed on working days before 9 AM, the product will be ready for dispatch on that same day. 24one is limited to 20 pieces per delivery.

10 by 10

We will manufacture and deliver 10 encoders within 10 working days (365 days a year - with the exception of 24th Dec. until 2nd Jan.)

48 h Express Service

We can process your order within 48 hours; we can ship stock items the same day.

Safety Services

- Adapted service packages
- Individual customer solutions

Sample Service

We manufacture samples of special designs or according to customer specification within shortest time.

Technical Support

Kübler' applications team is present on site all over the world for advice, analysis and support.

Kübler Germany / Austria	+49 7720 3903 952
Kübler France	+33 3 89 53 45 45
Kübler Italy	+39 0 26 42 33 45
Kübler Poland	+48 6 18 49 99 02
Kübler Turkey	+90 216 999 9791
Kübler China	+86 10 8471 0818
Kübler India	+91 8600 147 280
Kübler USA	+1 855 583 2537

AFTERSALES

Kübler plus

Service Excellence provided by Kübler application spe-cialists for target sectors

Service Centres, globally on your doorstep: Advice, analysis, support during installation in over 50 countries

Product security – replacement models at the end of the product life-cycle

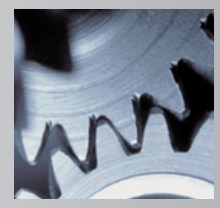

Product information

We offer additional information on our products and system solutions in the following main catalogs:

Position and Motion Sensors

- Incremental and absolute encoders
- Fieldbus and Industrial Ethernet encoders
- Bearingless encoders
- Explosion protected encoders ATEX / IECEx
- Linear magnetic measuring systems
- Draw-wire encoders
- Inclinometers
- Connection technology

Order-No. German **R.100.568**
Order-No. English **R.100.569**

Counters and Process Devices

- Pulse counters and preset counters
- Hour meters and timers
- Frequency meters and tachometers
- Combination time and energy meters
- Position displays
- Process displays and controllers for temperature, analog signals and strain-gauge
- Setpoint adjuster

Order-No. German **R.100.156**
Order-No. English **R.100.157**

Transmission Technology

- Slip rings, modular system
- Slip rings, bearingless modular system
- Slip rings, contactless transmission
- Slip rings, compact and low-maintenance
- Slip rings, Ethernet transmission
- Optical fiber signal transmission modules
- Cables, connectors and pre-assembled cordsets

Order-No. German **R.600.948**
Order-No. English **R.600.948.001**

Functional Safety

- Certified incremental and absolute encoders
- Certified explosion-protected encoders ATEX / IECEx
- Modules for safe drive monitoring
- Safe fieldbus gateways
- Safe speed monitors
- Adapted service packages
- Connection technology

Order-No. German **R65001.0001**
Order-No. English **R65001.0002**

Elevator

www.kuebler.com/elevator

Kübler Group
Fritz Kübler GmbH
Schubertstrasse 47
78054 Villingen-Schwenningen
Germany
Phone +49 7720 3903-0
Fax +49 7720 21564
info@kuebler.com
www.kuebler.com

R600193.001 04 250 16 ES